PLASTIC FLOW METER SF400 – Spring Type – Without alarm switch type

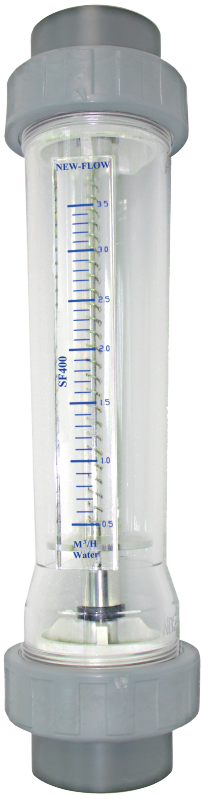

Technical Data

Approvals:

Service: Liquid, Oil
Wetted parts material:
Body: Polycarbonate (P.C); Polysulfone (PSU) available
O-ring: Viton
Float: SS316
Connection: SS316, PVC, PVDF available
Spring: SS316
Connection size: 1½", 2"NPT female available
Mounting: Vertical and Horizontal available, various flow directions
Accuracy: ±5% full scale
Max. working pressure limit: 1.2 MPa (12 kg/cm²)
Max. test pressure: 2.0 MPa (20 kg/cm²) (water 25°C)
Max. working temperature limit: -10°C to 60°C (for PC body); -10°C to 110°C (for PSU body)

Dimensions-mm

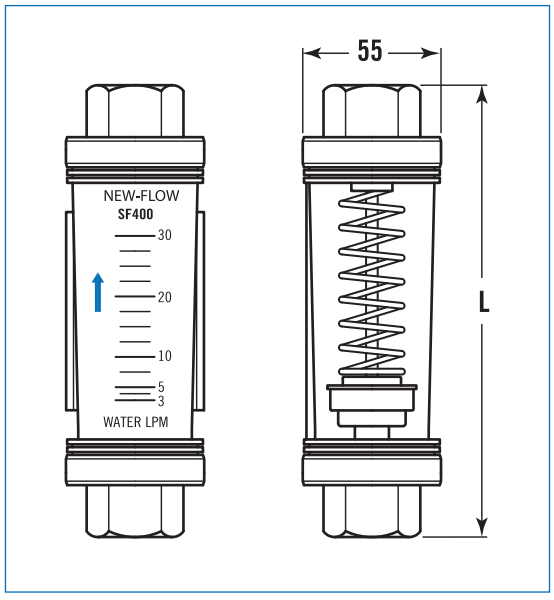

Flow Direction Types

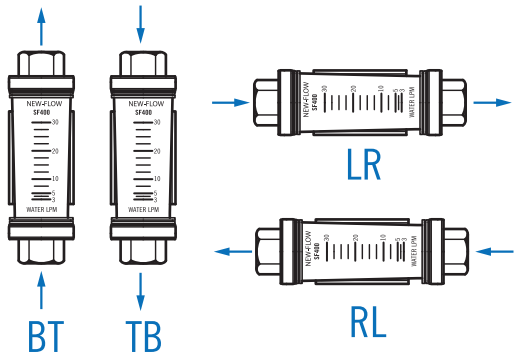

Ordering Information

SF400	Code	Flow Range [Water-LPM (Litter per Minute)]
	A	25~250 LPM (only 1½" available)
	B	50~500 LPM (only 2" available)

Code	Body Material		
PC	Polycarbonate	PSU	Polysulfone

Code	Connection Material
	(1) SS316 (2) PVC (3) PVDF

Code	Process Connection in Female
	(A) 1½"NPT (L=385mm) (B) 2"NPT (L=415mm)

Code	Flow Direction						
BT	Bottom to Top	TB	Top to Bottom	RL	Right to Left	LR	Left to Right

SF400						Complete ordering code